MOUNTAIN
PANEL PRODUCTS

JUMBO CROSSCUT SAW

SIP SOLUTIONS DESIGNED BY SIP EXPERTS

(304) 266-9227

mountainpanelproducts.com

hello@mountainpanelproducts.com

ABOVE: MPP-111 Jumbo Crosscut Saw

NOTE: Image for illustrative purposes only

MPP-111 CROSSCUT SAW

The MPP-111 Composite Panel Jumbo Crosscut Saw has been specifically designed & tailored to service the SIP industry.

The MPP-111 has been designed for fast processing of large, thick SIP panels such as floors, walls & roofs with high tolerance accuracy.

The machine's twin saw cutting gantry has the ability to cut through large scale thick Composite Structural Panels to the size required.

Extremely flexible operation & cutting parameters allow you to increase production & quality at an enviable speed, whilst cutting costs on labour & reduce overall waste in your production line.

Elements up to 8′ x 24′ or (2.38m x 7.36m) can be processed in both X & Y axis up to a thickness of 12″ or 311mm with our standard model, but can be built to suit your cutting requirements.

Designed for single operator use, the MPP-111 allows for simple, straight or angled Circular Saw cutting of SIPs, at speed & with the accuracy required for world class fabrication.

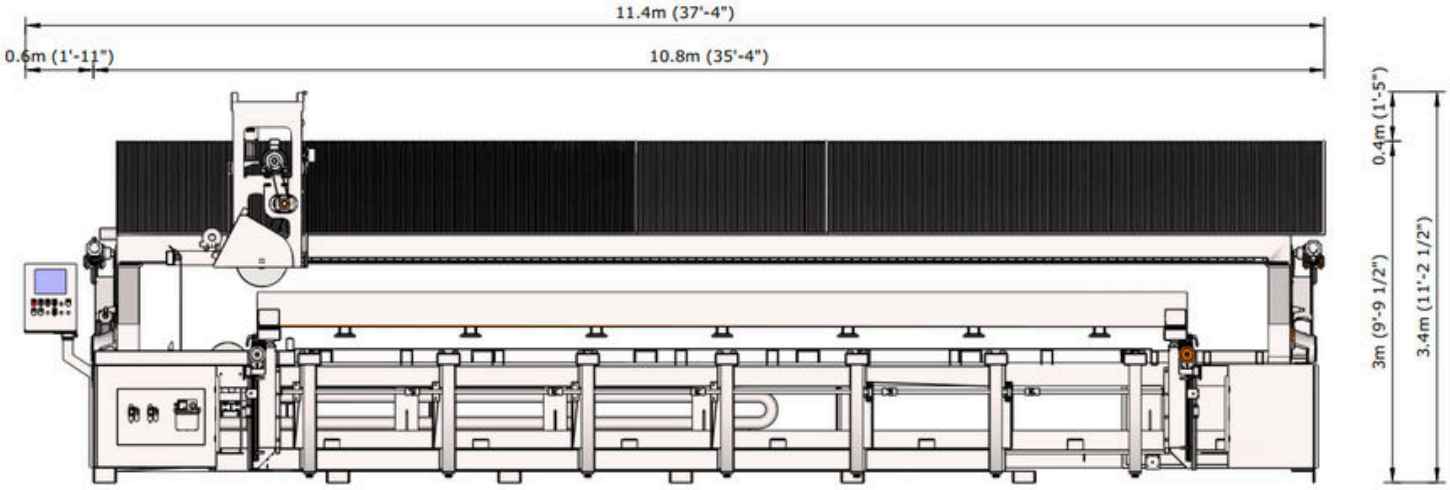

FRONT ELEVATION

ABOVE: MPP-111 Jumbo Crosscut Saw

NOTE: Image for illustrative purposes only

Standard Features

- Adjustable end stop fence (on X axis parallel with saw travel) that can be lowered to allow for continuous in feed/out feed operation of material
- Cutting Bed that accommodates a panel size of 8′ x 24′ (2.38m x 7.36m)
- Cutting Gantry:
  - Top 18" (450mm) / Bottom 12" (300mm) Circular Saw blades
  - Blades run in tandem from top & bottom
  - Combined cutting depth of 10.5" (266mm)
  - Deeper cutting of SIP is workable via the manual breaking or hot-wire of the uncut foam core
  - Maximum panel thickness which fits under clamping bar is 14"
- Board Fixation:
  - Clamping arm & fence guides locate & hold panel in position
- Hot Wire station affixed to output/discharge side of machine
- Dust management & collection:
  - Dust Guards for protection & dust management where practicable
  - Multiple dust extraction points for easy connection to plant dust collection system
- Solid 3mm minimum Steel frame machine structure

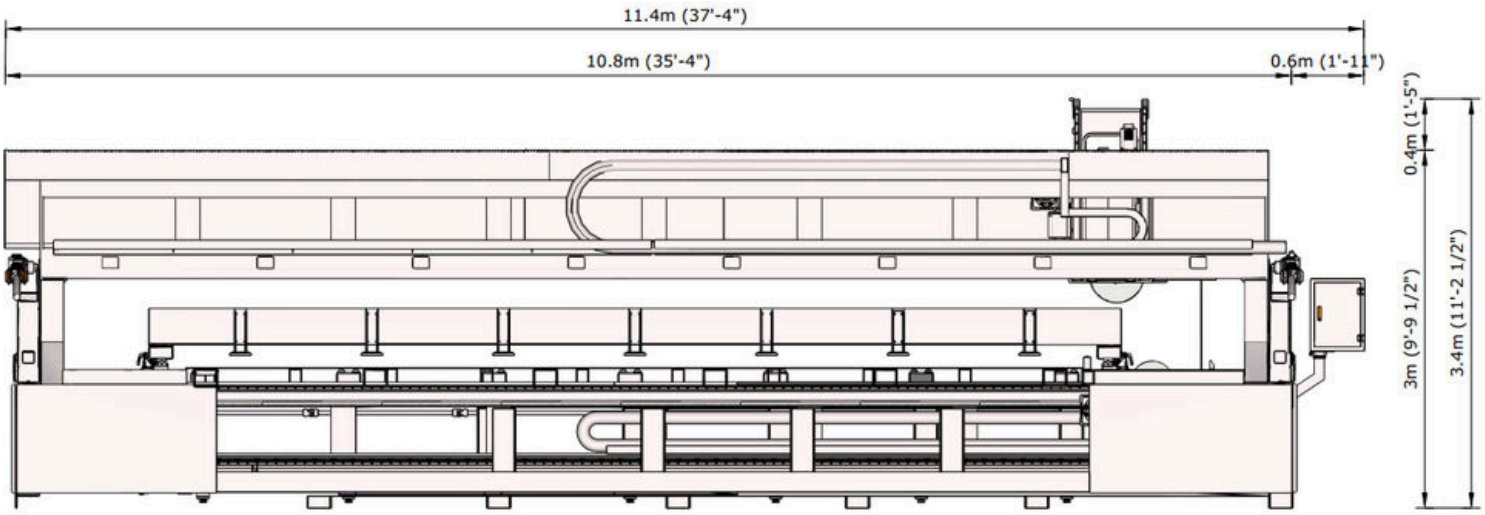

BACK ELEVATION

ABOVE: MPP-111 Jumbo Crosscut Saw

NOTE: Image for illustrative purposes only

Standard Features

- Safety Guarding & Protection
  - Emergency stop at min. 3 locations
  - Fence to protect cutting area
  - Laser Light System installed into both loading access bays for safety cut off within saw proximity
  - Guards to be reviewed when model is issued
- Pivoting upper Frame with settings from 0-60 degrees
- Saw carriage is guided with linear bushings running on hardened rails
- Belt Driven Saw arbor with dual ball bearings
- Adjustable pneumatic hold-down beam with lowered clamping arms
- Low Profile Control Panel
- End Guards with safety interlocks
- Carbide tip saw blades

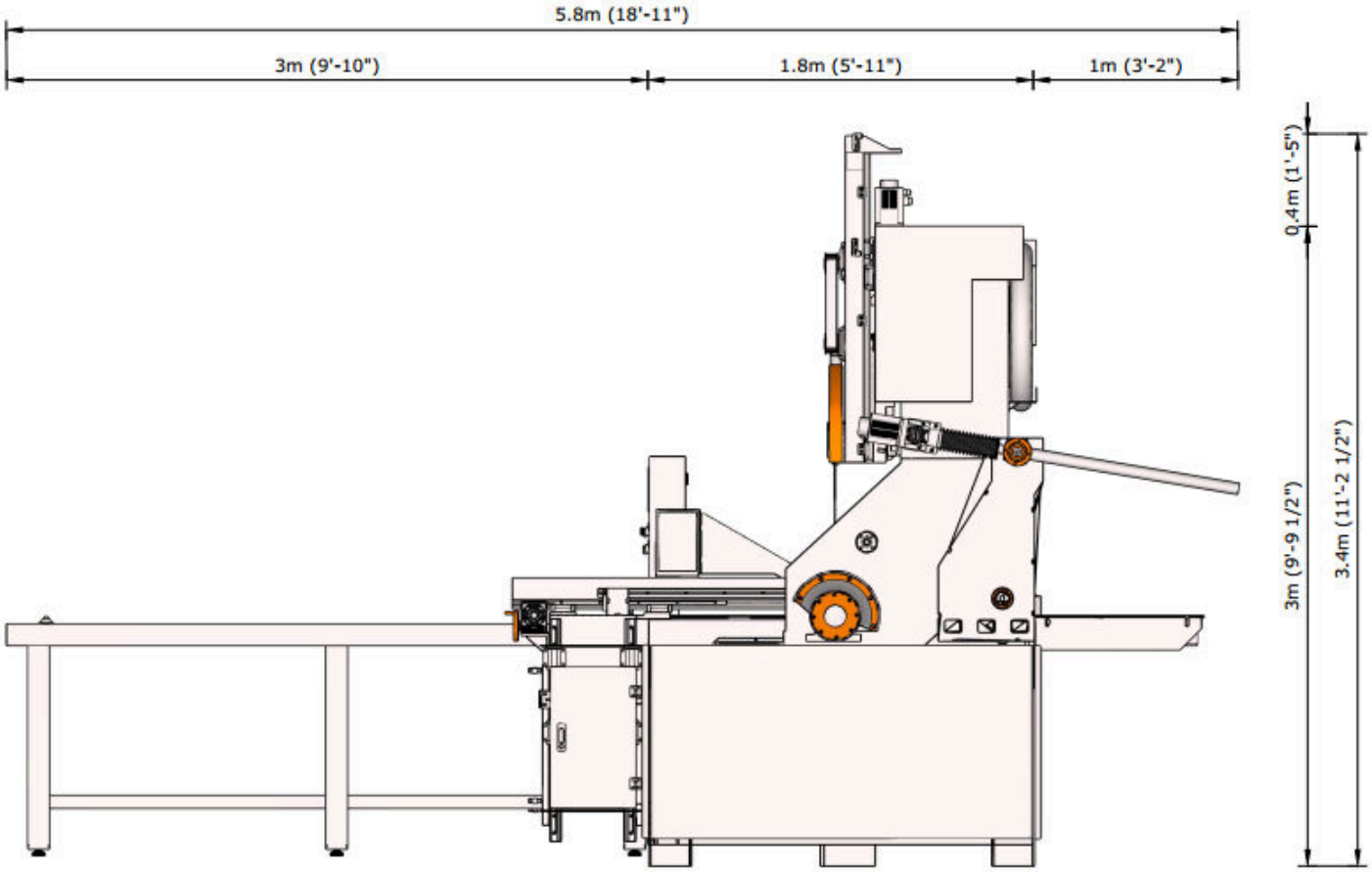

RIGHT ELEVATION

ABOVE: MPP-111 Jumbo Crosscut Saw

NOTE: Image for illustrative purposes only

Specifications & Performance

Processing Options & Capacity

- Cuts: straight, angled or compound angle

Circular Saw:

- Cutting capacity: 0 deg. to 60 deg.
- Coast Stop/Inertial Stop braking with safety electric brake power cut off
- Safety stop mid operation via emergency stops at various locations. Stops all carriage movement & saw blade power.

MOUNTAIN
PANEL PRODUCTS

Feature Specifications

Feature	Imperial	Metric
Total Circular Saw cutting depth - 90 degrees	14"	355mm
Circular Saw x 2:		
Saw blade top diametre	18"	450mm
Saw blade bottom diametre	12"	300mm
Saw blade kerf	3/16"	5mm
Saw blade speed	480"/min	12.2m/min
Saw arbor (diameter)	1"	25mm
Saw motor power	2 x 10HP	2 x 7.5KW

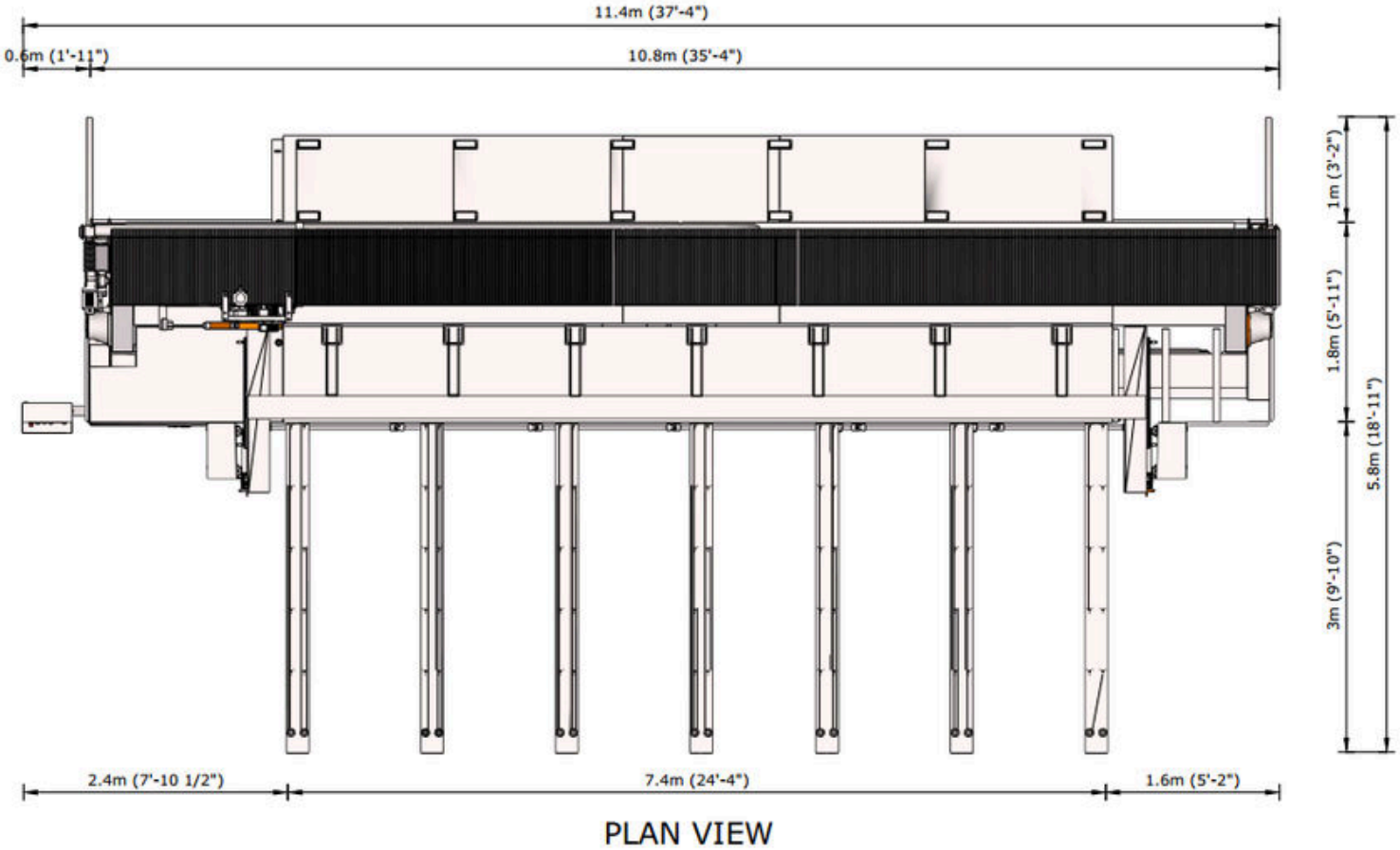

ABOVE: MPP-111 Jumbo Crosscut Saw

NOTE: Image for illustrative purposes only

Optional Modifications

- Increased Cutting Bed Size
- Additional Protective Fencing, Guards & Safety Rails
- Infeed/outfeed conveyor systems

Safety

The MP-111 Crosscut Saw is constructed with numerous safety features.

We can incorporate, where possible, additional safety measures & add these to the machine during the design phase, with associated cost variations.

Current safety features include:

- Control Centre is safely located adjacent to the machine
- Laser safety lines (infrared induction) as per Safety Plan
- Compression matt for Control Panel
- Machine Guards
- Brushes to Operational zones
- Industrial Protective Fence available by request, according to local requirements

MOUNTAIN
PANEL PRODUCTS

Installation Requirements

Air
- 90PSI
- 8CFM

Power Consumption
- 480V, 3 Phase, 60Hz

Power Requirements
- 2 Points of connection as per Electrical Plan
- 1 x 80 Amps

Foundation Support (max. pressure through each leg)
- Per leg: 1800lbs (800kg)
- N# of legs: 16

Machine Dimensions

Machine Only	Imperial	Metric
Length	35'	10.6m
Width	35'	10.6m
Height	12'	3.6m
Weight	12400lbs	6.2t

Maxing Shipping Information Per Unit	Imperial	Metric
Length	36'	11m
Width	10.5'	3.2m
Height	9'	2.7m
Weight	13800lbs	6.9t

MOUNTAIN
PANEL PRODUCTS

Our Commitment to You

At Mountain Panel Products, we're commited to providing world class machinery & exceptional service to our clients.

When you purchase machinery from us, we supply a highly comprehensive documentation package including the following:

- 2D Dimensioned Drawings
- Electrical Schematics
- Safety Plan
- Machine Schematics & Parts Listing
- Operation Manuals
- Comprehensive FAQ's
- Transport Plan
- Maintenance Schedule
- Operational Videos

We also pride ourselves on our extensive training & superior after sales service.

All machines come with full online technical support, serviced through our Summit Platform.

The smooth & efficient integration of our machinery into your business is our priority.

MOUNTAIN
PANEL PRODUCTS

Your Expert SIP Manufacturing Partner

- Machinery specifically made & tailored for the SIP industry
- International experience in all major world markets
- Best price in it's class
- Smallest footprint in it's class
- Streamlined production & delivery
- Extensive Warranty & after market service
- Best price to performance metric of any comparable machine
- Full listed Parts Disclosure to enable local sourcing
- Professional training & support
- Free software upgrades
- Remote server access and assistance

(304) 266-9227

hello@mountainpanelproducts.com

mountainpanelproducts.com