MOUNTAIN
PANEL PRODUCTS

# JUMBO PANEL PRESS

## SIP SOLUTIONS DESIGNED BY SIP EXPERTS

(304) 266-9227

mountainpanelproducts.com

hello@mountainpanelproducts.com

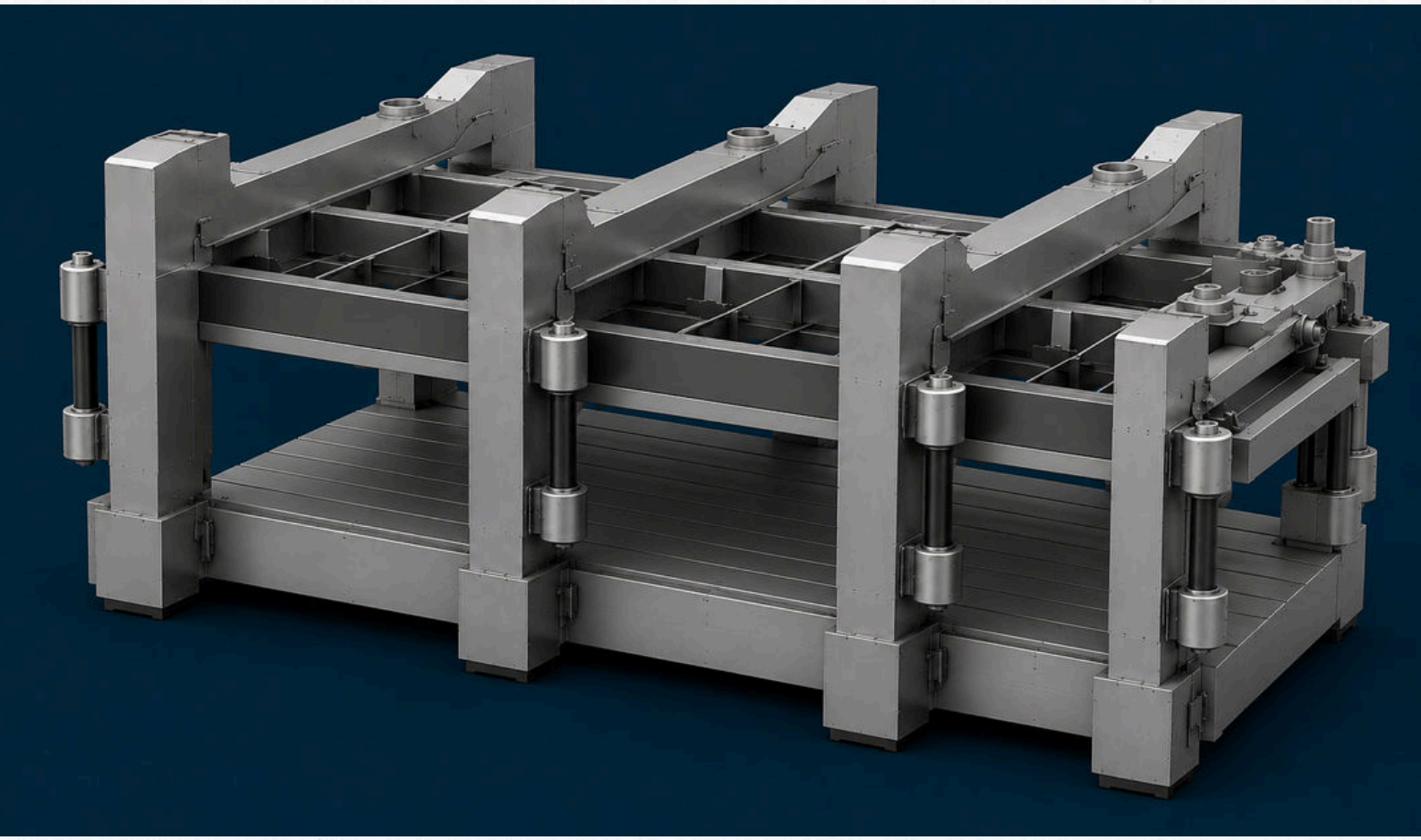

ABOVE: MPP-163 Jumbo Panel Press.

NOTE: Image for illustrative purposes only

# MPP-163 JUMBO PANEL PRESS

The MPP-163 Jumbo Panel Press has been designed & tailored to service the SIP industry.

The MPP-163 has been designed to press variable size SIPs up to 8′ x 24′ (2.438m x 7.315m) in size.

The unit can be designed for multiple panel size formats:

- 1 area of 8′ x 24' (2.44m x 7.32m)
- 2 areas of 4′ x 24′ (1.22m x 7.32m)
- 2 areas of 8′ x 12′ (2.44m x 3.66m)
- 4 areas of 4′ x 12′ (1.22m x 3.66m)

Extremely robust & flexible operational perimeters enable your factory to increase production & quality at an enviable speed, whilst cutting costs on labour & reducing overall waste in your production line.

Made from heavy gauge steel to last for a lifetime, this unit has been made as compact as possible whilst maintaining flexibility & workability.

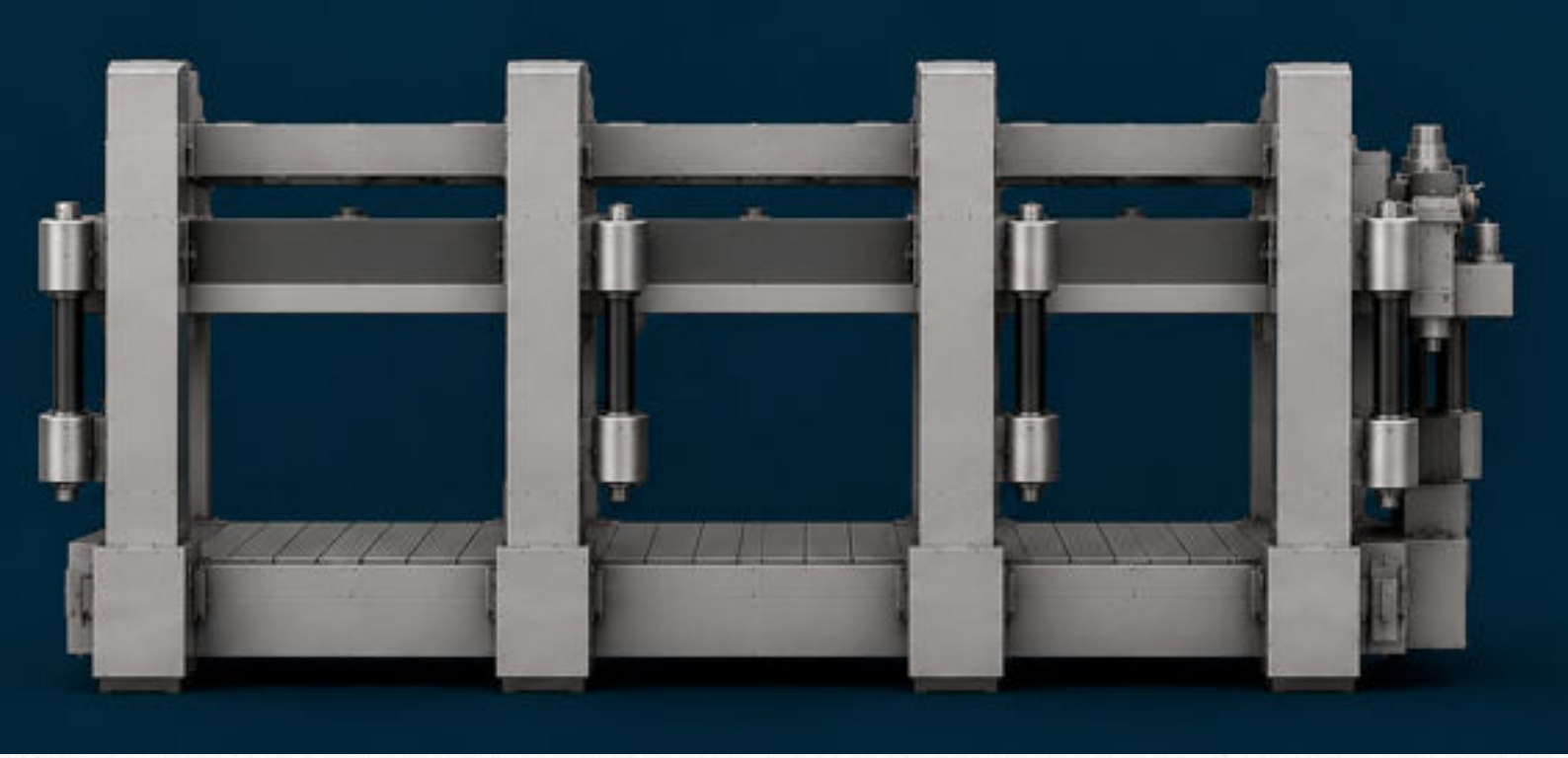

ABOVE: MPP-163 Jumbo Panel Press

NOTE: Image for illustrative purposes only

# Standard Features

- Bed that accommodates a panel size of 8′ x 24′ (2.438m x 7.315m)
- Split operational Plattens into 4 working modes
- Multi operational functionality to synchronise press quadrants

# Optional Modifications

- Single mode only press configuration
- Bed size - increased width or height
- Automated loading function with infeed rollers and stop light

# Specifications & Performance

Jumbo Panel Press Options & Capacity:

- Multi operation functionality (model dependent):
  - 1 area of 8′ x 24' (2.44m x 7.32m)
  - 2 areas of 4′ x 24′ (1.22m x 7.32m)
  - 2 areas of 8′ x 12′ (2.44m x 3.66m)
  - 4 areas of 4′ x 12′ (1.22m x 3.66m)
- Throat Measurement (max. panel stack height): 5′ (1.3m)
- Travel: reduced to 1.64' (500mm)
- Pressure to be 100KPA or 100T as most usage will not exceed 5PSI or 35KPA with an allowable uplift to 10PSI or 70KPA

MOUNTAIN
PANEL PRODUCTS

# Machine Dimensions

| Machine Only | Imperial | Metric |
|---|---|---|
| Length | 33' | 10.1m |
| Width | 9'4" | 2.85m |
| Height | 11'6" | 3.55m |
| Weight | 16000lbs | 8t |

| Maxing Shipping Information | Imperial | Metric |
|---|---|---|
| Length | 36'4" | 11.1m |
| Width | 10'5" | 3.2m |
| Height | 12'6" | 3.85m |
| Weight | 18000lbs | 9t |

# Installation Requirements

Compressed Air by Purchaser (in factory)
- Power: 90psi
- Volume: 8 cfm

Power Consumption
- 480V, 3 Phase, 60Hz

Foundation Support (pressure through each leg)
- Per leg: 4850lbs (2000kg)
- N# of legs: 6

MOUNTAIN
PANEL PRODUCTS

# Our Commitment to You

At Mountain Panel Products, we're commited to providing world class machinery & exceptional service to our clients.

When you purchase machinery from us, we supply a highly comprehensive documentation package including the following:

- 2D Dimensioned Drawings
- Electrical Schematics
- Safety Plan
- Machine Schematics & Parts Listing
- Operation Manuals
- Comprehensive FAQ's
- Transport Plan
- Maintenance Schedule
- Operational Videos

We also pride ourselves on our extensive training & superior after sales service.

All machines come with full online technical support, serviced through our Summit Platform.

The smooth & efficient integration of our machinery into your business is our priority.

MOUNTAIN
PANEL PRODUCTS

# Your Expert SIP Manufacturing Partner

- Machinery specifically made & tailored for the SIP industry
- International experience in all major world markets
- Best price in it's class
- Smallest footprint in it's class
- Streamlined production & delivery
- Extensive Warranty & after market service
- Best price to performance metric of any comparable machine
- Full listed Parts Disclosure to enable local sourcing
- Professional training & support
- Free software upgrades
- Remote server access and assistance

(304) 266-9227

hello@mountainpanelproducts.com

mountainpanelproducts.com